Incandescent

6" Housing IC, Non-IC, & Air Tight

Recessed

Type _____

P87-AT ☐

Catalog No.	Lamping	Dimensions (Inches) A	B	C
P87-AT	See Trim Specifications	7-7/8	10-3/4	7-1/4
		Ceiling Opening 6-7/8		

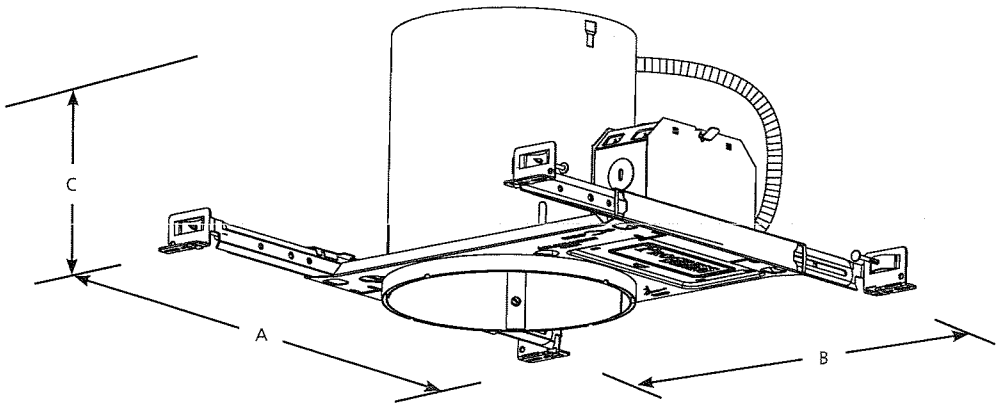

Specifications:

Wiring

- Universal junction box with snap-out sides
- Removable housing for field inspection of wiring
- Grounding pigtail
- Knockout free Romex clamps
- 1/2" & 3/4" Knock outs for rigid or BX fittings

Construction

- Housing adjusts for ceiling thickness from 1/2" to 1-1/2" thick
- Full wrap-around plaster frame
- Removable K.O. for remodel use (P8607-01 plaster frame clips also required)
- Galvanized steel construction
- Porcelain socket with nickel-plated brass screw shell
- Notched housing for chalkline alignment
- Overspray protection
- Socket can be used as a temporary work light with 'A' lamp

Bar Hangers

- Integral nail for wood joist construction
- Integral T-bar mounting clamps
- Spans 24" T-bar suspended ceilings
- Lock to secure housing
- Captive with joist alignment tabs
- 90-degree mounting for tight spaces

Labeling

- IC and Non-IC rated
- Performance tested to ASTM E283 Air Tight requirements, including IECC, CA Title 24 and Washington State Energy Codes
- UL-CUL listed for damp location and through branch wiring
- Approved for use in New York City per calendar #40330.

Lamp/Trim

- Socket mounts to trim for optimum performance and consistent lamp position
- Trim-Lok® action forces trim to fit snugly against the ceiling

Rev. 11/12

Progress Lighting
701 Millennium Blvd.
Greenville, South Carolina
29607

www.progresslighting.com

Patent# 5758959

LED

6" Housing IC, Non-IC, & Air Tight w/ Quick Link Connector

Recessed

Type _____

P87-LED ☐

Catalog No.	Lamping	Dimensions (Inches) A	B	C
P87-LED	See Trim Specifications	7-7/8	10-3/4	7-1/4
		Ceiling Opening 6-7/8		

PROGRESS LED

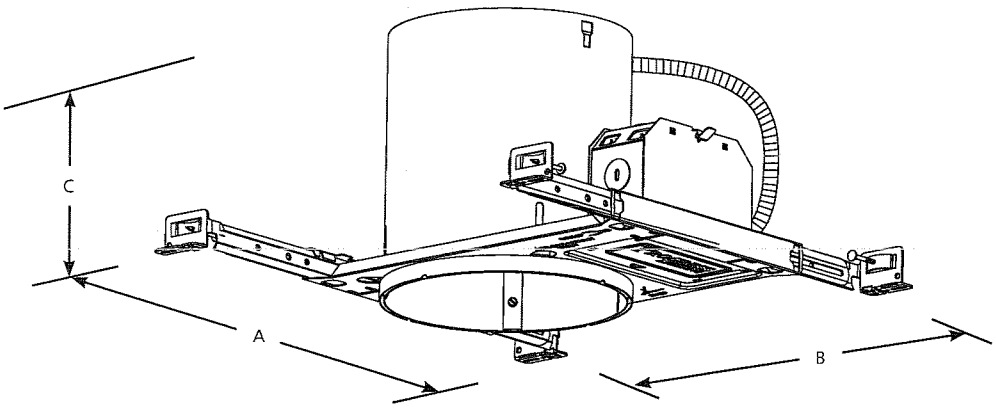

The P87-LED IC rated, new construction recessed can is designed specifically for use with P8071 Series LED trims (purchased separately). The integral quick link connector provides electrical connection to the trim in place of a traditional Edison base socket. The P87-LED in conjunction with the P8071 series LED trims is a high efficacy luminaire compliant with California Title 24 requirements for recessed lighting. Marked for 15W maximum input power, the P87-LED is also a great option where lighting power densities limit allowable W/ft2.

Title 24 Lighting

Specifications:

Wiring

- Universal junction box with snap-out sides
- Removable housing for field inspection of wiring
- Grounding pigtail
- Knockout free Romex clamps
- 1/2" & 3/4" Knock outs for rigid or BX fittings
- Pre-Installed wire quick connects
- Thru-branch wiring for #12 90° conductors (4 in/4 out)

Construction

- Housing adjusts for ceiling thickness from 1/2" to 1-1/2" thick
- Full wrap-around plaster frame
- Removable K.O. for remodel use (P8607-01 plaster frame clips also required)
- Galvanized steel construction
- Notched housing for chalkline alignment
- Quick connector allows easy electrical connection with trim

Bar Hangers

- Integral nail for wood joist construction
- Integral T-bar mounting clip
- Spans 24" T-bar for suspended ceilings
- Lock to secure housing
- Captive with joist adjustment tabs
- 90-degree mounting for tight spaces

Labeling/Compliance

- IC and Non-IC rated
- Performance tested to ASTM E283 Air Tight requirements, including IECC, CA Title 24 and Washington State Energy Codes
- UL-CUL listed for damp location and through branch wiring
- Approved for use in New York City per calendar #40330.
- Complies with California Title 24
- Labeled as 15w maximum input

Trim

- Trim-Lok® action forces trim to fit snugly against the ceiling
- P87-LED is designed for use with P8071 Series LED Trims (purchased separately)

Progress Lighting
701 Millennium Blvd.
Greenville, South Carolina
29607

www.progresslighting.com

Patent# 5758959

Rev. 11/12

Incandescent

6" Housing IC, Non-IC, & Air Tight w/Quick Connects

Recessed

Type _____

P87-ATQC ☐

Catalog No.	Lamping	Dimensions (Inches) A	B	C
P87-ATQC	See Trim Specifications	7-7/8	10-3/4	7-1/4
		Ceiling Opening 6-7/8		

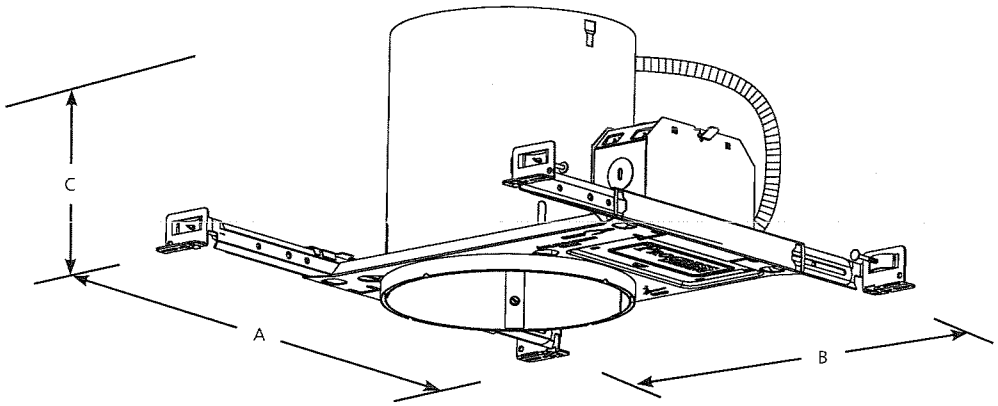

Specifications:

Wiring

- Universal junction box with snap-out sides
- Removable housing for field inspection of wiring
- Grounding pigtail
- Knockout free Romex clamps
- 1/2" & 3/4" Knock outs for rigid or BX fittings
- Pre-Installed wire quick connects
- Thru-branch wiring for #12 90° conductors (4 in/4 out)

Construction

- Housing adjusts for ceiling thickness from 1/2" to 1-1/2" thick
- Full wrap-around plaster frame
- Removable K.O. for remodel use (P8607-01 plaster frame clips also required)
- Galvanized steel construction
- Porcelain socket with nickel-plated brass screw shell
- Notched housing for chalkline alignment
- Pre-installed disposable plastic cap protects socket screw shell from paint overspray
- Socket can be used as a temporary work light with 'A' lamp

Bar Hangers

- Integral nail for wood joist construction
- Integral snap-on T-bar mounting clip
- Span 24" T-bar for suspended ceilings
- Lock to secure housing
- Captive with joist alignment tabs
- 90-degree mounting for tight spaces

Labeling

- IC and Non-IC rated
- Performance tested to ASTM E283 Air Tight requirements, including IECC, CA Title 24 and Washington State Energy Codes
- UL-CUL listed for damp location and through branch wiring
- Approved for use in New York City per calendar #40330.

Lamp/Trim

- Socket mounts to trim for optimum performance, and provides consistent vertical lamp position
- Trim-Lok® action forces trim to fit snugly against the ceiling

Progress Lighting
701 Millennium Blvd.
Greenville, South Carolina
29607

www.progresslighting.com

Patent# 5758959

Rev. 11/12

Incandescent Trims

6" Baffle IC and Non-IC

Recessed

Type _____

	-28	-31
P8075	☐	☐

Catalog No.	Finish White	Finish Black	Dimensions (Inches) A	B	C
P8075	-28	-31	7-3/4	6-1/4	4-3/4

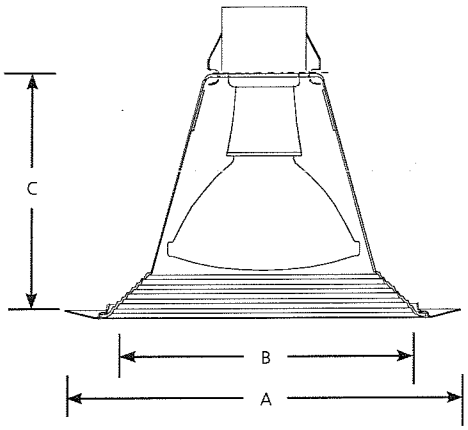

Lamp Wattage

Housing	IC	Non-IC
P87-AT	75w PAR; 65w BR30	75w PAR; 100w A19; 85w BR30
P87-ATQC	75w PAR; 65w BR30	75w PAR; 100w A19; 85w BR30
P821-AT	75w PAR30/A19; 85w BR30	75w PAR30/A19; 85w BR30
P187-TG	75w PAR; 65w BR30	75w PAR; 100w A19; 85w BR30
P821-FB, FBFC	N/A	75w PAR30; 85w BR30

Specifications:

Flange

- Bright white powder painted metal flange

Trim

- All aluminum construction
- White baffle (-28) is one-piece construction with integral flange Black baffle (-31) is two-piece construction with separate white flange ring
- No light leaks around trim flange
- Socket mounts to trim for optimum performance and consistent lamp position
- Trim-Lok action for trim retention forces trim to fit snugly against the ceiling
- Powder painted bright white

Labeling

- UL-CUL damp location listed
- Rated IC and Non-IC

Options

- Specify after Catalog No.:
  White (-28)
  Black (-31)

Progress Lighting
701 Millennium Blvd.
Greenville, South Carolina
29607

www.progresslighting.com

Patent# 5,758,992, 5,758,993

P87-AT

P87-AT WITH P8075-28

Report No. 98169

No. Lamps: 1 Type Lamp: 75PAR30 LN/FL Total Lumens: 985

Fixture Efficiency: 97.9%

S/MH Ratio: 1.1

Single Fixture Data

Ceiling Ht.(Ft.)	10% Values Beam Angle - 90 Ft.-C	10% Values Beam Angle - 90 Beam Dia.	Zero Degrees Ft.-C	50% Values Beam Angle - 56 Ft.-C	50% Values Beam Angle - 56 Beam Dia.
8	2.3	11	23.0	11.5	6
10	1.2	15	12.4	6.2	8
12	0.8	19	7.7	3.9	10
14	0.5	23	5.3	2.6	12
16	0.4	27	3.8	1.9	14

Ft.-C (Footcandles) are initial and measured 2'-6" from floor

Quick Calculator Charts

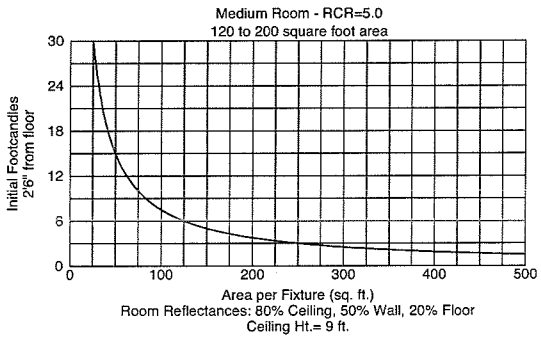

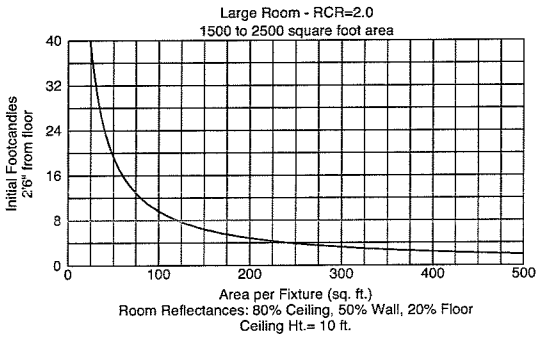

DISTRIBUTION CURVE

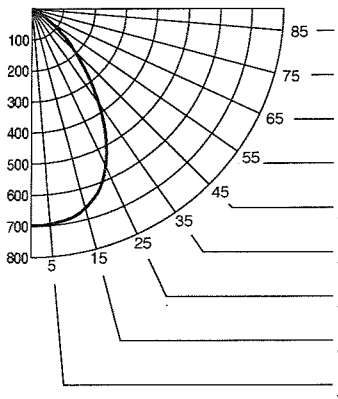

INTENSITY DATA

DEGREES	CANDELA
90	0
85	0
80	0
75	1
70	5
65	11
60	28
55	66
50	125
45	193
40	275
35	370
30	470
25	558
20	624
15	664
10	687
5	695
0	697

ZONAL CAVITY COEFFICIENTS OF UTILIZATION

Effective Floor Cavity Reflectance 0.20

RC	80				70				50			30			10			0
RW	70	50	30	10	70	50	30	10	50	30	10	50	30	10	50	30	10	0
0	116	116	116	116	114	114	114	114	109	109	109	104	104	104	100	100	100	98
1	110	107	104	102	108	105	102	100	101	99	97	97	96	94	94	93	91	90
2	104	98	93	90	101	96	92	89	93	90	87	90	87	85	87	85	83	81
3	97	90	84	80	95	88	83	79	86	81	78	83	80	76	81	78	75	74
4	91	82	76	71	89	81	75	71	79	74	70	77	73	69	75	71	68	67
5	85	76	69	64	84	75	69	64	73	68	64	71	67	63	70	66	62	61
6	80	70	63	59	79	69	63	58	68	62	58	66	61	57	65	60	57	55
7	75	65	58	53	74	64	58	53	63	57	53	62	57	53	61	56	52	51
8	71	60	54	49	70	60	53	49	59	53	49	58	52	48	57	52	48	47
9	67	56	50	45	66	56	49	45	55	49	45	54	49	45	53	48	45	43
10	63	53	46	42	62	52	46	42	51	46	42	50	45	42	50	45	41	40

Compact Fluorescent

6" Baffle Single Lamp Vertical IC & Non-IC

Recessed

Type _____

	-28	-31
P8075	☐	☐

Catalog No.	Finish White	Finish Black	Dimensions (Inches) A	B	C
P8075	-28	-31	7-3/4	6-1/4	4-3/4

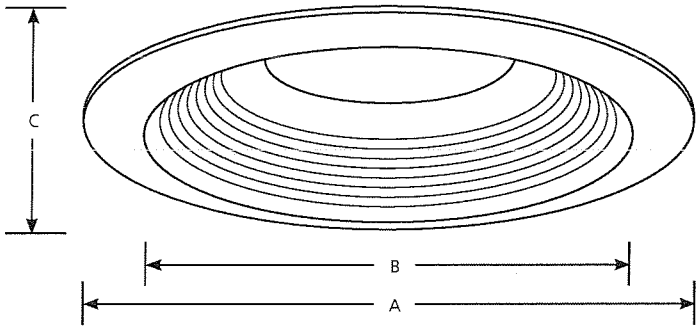

Lamp Wattage

Housing	IC	Non-IC
P83-AT	N/A	13w Quad/Triple-tube
P83-ICAT	13w 4-pin Quad/Triple-tube CF	13w 4-pin Quad/Triple-tube CF
P88-ICAT	18w 4-pin Quad/Triple-tube CF	18w 4-pin Quad/Triple-tube CF
P183-EB	13w 4-pin Quad/Triple-tube CF	13w 4-pin Quad/Triple-tube CF
P83-26ICAT	26w 4-pin Triple-tube CF	26w 4-pin Triple-tube CF
P62-FB	N/A	26 or 32w 4-pin Triple-tube CF

Specifications:

Flange

- Bright white powder coated flange
- No light leaks around trim flange
- Covers irregular ceiling openings

Trim

- One piece aluminum construction
- Designed for use with vertically mounted 13 watt Quad or Triple tube (GE) C.F.
- Socket mounts to trim for optimum performance and consistent lamp position
- No light leaks around trim flange
- Trim-Lok action for trim retention forces trim to fit snugly against the ceiling

Options

- Specify after Catalog No: White (-28), Black (-31)

Labels

- Maximum overall length of lamp cannot exceed 5.5" (5-1/2")
- Available are: GE -F26TBX, Phillips PLT26, Sylvania CF26 or 32DT, or Progress 7808-01 (26w)

Labels

- UL-CUL damp location listed
- Rated IC and Non-IC

Progress Lighting
Post Office Box 5704
Spartanburg, South Carolina
29304-5704

www.progresslighting.com

Patent# 5,758,992, 5,758,993

Rev. 7/12

Incandescent

6" Eyeball Trim IC & Non-IC

Recessed

Type _____

	-09	-10	-20	-28	-36
P8076	☐	☐	☐	☐	☐

	Finish					Dimensions (Inches)	
Catalog No.	Brushed Nickel	Polished Brass	Antique Bronze	White	Chestnut	A	B
P8076	-09	-10	-20	-28	-36	7-3/4	4

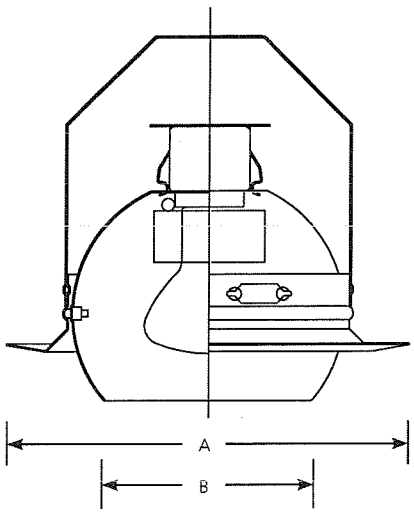

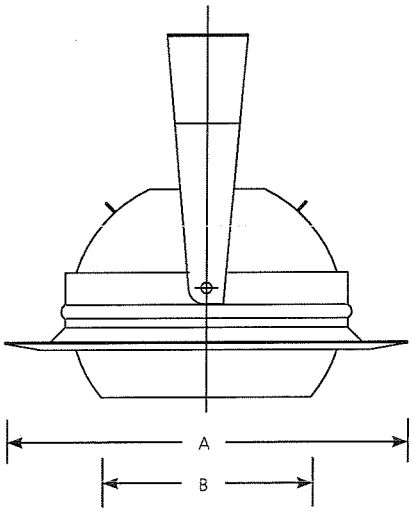

Lamp Wattage

Housing	IC	Non-IC
P87-AT	75PAR30/65BR30	75PAR30/65BR30
P87-ATQC	75PAR30/65BR30	75PAR30/65BR30
P187-TG	75PAR30/65BR30	75PAR30/65BR30
P821-AT	85PAR30/75PAR30	85PAR30/75PAR30
P821-FB	N/A	85PAR30/75PAR30

Specifications:

Flange

- Flanges on all match the ball and trim finish
- No light leaks around trim flange
- Covers irregular ceiling openings

Trim

- Built-in bracket to accept Trim-Lok spring
- Trim-Lok action forces trim to fit snugly against the ceiling
- Socket mounts directly to top of ball for consistent lamp position
- Lamp tilt 30 degrees, 358 degree positioning
- Steel construction
- Eyeball finish matches trim finish
- Can be used in 45° sloped ceilings with P87-AT, P87-ATQC, and P187-TG housings

Options

- White (-28) or chestnut (-36) painted finishes
- Brushed nickel (-09) polished brass (-10), or antique bronze (-20) plated finishes

Labels

- UL-CUL damp location listed

Photometrics

- Refer to PAR 30 & BR30 lamp application data

Progress Lighting
701 Millennium Blvd.
Greenville, South Carolina
29607

www.progresslighting.com

Rev. 10/12

Progress Lighting
701 Millennium Blvd.
Greenville, South Carolina
29607

www.progresslighting.com

BR30 and PAR30 Lamp Application Data for Recessed Eyeball Units

Figure 1
Single fixture

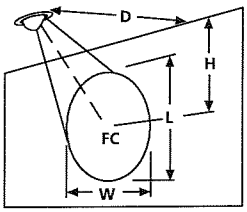

Figure 2
Multiple fixture

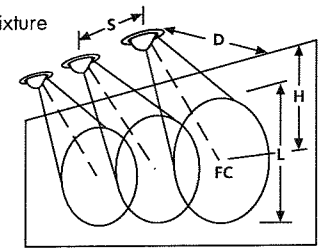

BR30 Flood Lamp

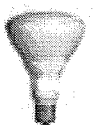

	Walls and Vertical Objects														
	H	F.C.	L	W	S	H	F.C.	L	W	S	H	F.C.	L	W	S
		D = 2 FT					D = 3 FT					D = 4 FT			
65BR30FL	4	12	*	4.7	3.6	5	8	*	6.1	4.7	7	4	*	8.4	6.4
CBCP - 525	5	7	*	5.6	4.3	6	5	*	7.0	5.4	8	3	*	9.3	7.2
Beam - 55 deg.	6	4	*	6.6	5.1	7	4	*	7.9	6.1	9	2	*	10.2	7.9

BR30 Spot Lamp

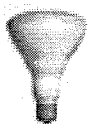

	Walls and Vertical Objects														
	H	F.C.	L	W	S	H	F.C.	L	W	S	H	F.C.	L	W	S
		D = 2 FT					D = 3 FT					D = 4 FT			
65BR30SP	4	36	4.0	1.6	1.5	5	25	4.4	2.1	2.0	7	12	6.3	2.8	2.7
CBCP - 1625	5	21	6.3	1.9	1.8	6	16	6.1	2.4	2.3	8	9	8.1	3.2	3.0
Beam - 20 deg.	6	13	9.8	2.2	2.1	7	11	8.2	2.7	2.6	9	7	10.1	3.5	3.3

PAR30 Flood Lamps

	Walls and Vertical Objects														
	H	F.C.	L	W	S	H	F.C.	L	W	S	H	F.C.	L	W	S
		D = 2 FT					D = 3 FT					D = 4 FT			
50PAR30/HIR/FL	4	33	10.6	2.8	2.5	5	59	9.8	3.7	3.2	7	12	14.7	5.1	4.5
CBCP - 1500	5	19	24.2	3.4	3.0	6	36	15.8	4.2	3.7	8	8	21.1	5.7	5.0
Beam - 35 deg.	6	12	*	4.0	3.5	7	23	26.6	4.8	4.2	9	6	30.6	6.2	5.5
50PAR30FL	4	31	10.6	2.8	2.5	5	21	9.8	3.7	3.2	7	11	14.7	5.1	4.5
CBCP - 1400	5	18	24.2	3.4	3.0	6	14	15.8	4.2	3.7	8	8	21.1	5.7	5.0
Beam - 35 deg.	6	11	*	4.0	3.5	7	10	26.6	4.8	4.2	9	6	30.6	6.2	5.5
75PAR30FL	4	44	10.6	2.8	2.5	5	30	9.8	3.7	3.2	7	15	14.7	5.1	4.5
CBCP - 2000	5	26	24.2	3.4	3.0	6	20	15.8	4.2	3.7	8	11	21.1	5.7	5.0
Beam - 35 deg.	6	16	*	4.0	3.5	7	14	26.6	4.8	4.2	9	8	30.6	6.2	5.5
75PAR30FL-L	4	69	5.6	2.0	1.9	5	47	5.8	2.6	2.4	7	24	8.4	3.9	3.3
CBCP - 3100	5	40	9.3	2.4	2.2	6	31	8.3	3.0	2.8	8	17	11.1	4.0	3.7
Beam - 25 deg.	6	24	16.0	2.8	2.6	7	21	11.7	3.4	3.2	9	13	14.3	4.4	4.1

PAR30 Spot Lamps

	Walls and Vertical Objects														
	H	F.C.	L	W	S	H	F.C.	L	W	S	H	F.C.	L	W	S
		D = 3 FT					D = 4 FT					D = 5 FT			
50PAP30/HIR/NSP	5	197	1.8	0.9	0.9	7	100	2.6	1.3	1.3	9	59	3.4	1.6	1.6
CBCP - 13,000	6	128	2.4	1.1	1.0	8	72	3.2	1.4	1.4	10	46	4.1	1.8	1.7
Beam - 9 deg.	7	88	3.1	1.2	1.2	9	55	3.9	1.5	1.5	11	37	4.8	1.9	1.9
50PAP20NSP	5	105	2.0	1.0	1.0	7	53	2.9	1.4	1.4	9	31	3.8	1.8	1.8
CBCP - 6,900	6	68	2.7	1.2	1.2	8	38	3.6	1.6	1.6	10	25	4.5	2.0	1.9
Beam - 10 deg.	7	47	3.5	1.3	1.3	9	29	4.4	1.7	1.7	11	19	5.3	2.1	2.1
75PAR30NSP	5	197	2.0	1.0	1.0	7	100	2.9	1.4	1.4	9	59	3.8	1.8	1.8
CBCP - 13,000	6	128	2.7	1.2	1.2	8	72	3.6	1.6	1.6	10	46	4.5	2.0	1.9
Beam - 10 deg.	7	88	3.5	1.3	1.3	9	55	4.4	1.7	1.7	11	37	5.3	2.1	2.1
75PAR30NSP-L	5	137	2.0	1.0	1.0	7	69	2.9	1.4	1.4	9	41	3.8	1.8	1.8
CBCP - 9,000	6	89	2.7	1.2	1.2	8	50	3.6	1.6	1.6	10	32	4.5	2.0	1.9
Beam - 10 deg.	7	61	3.5	1.3	1.3	9	38	4.4	1.7	1.7	11	25	5.3	2.1	2.1

Walls and Vertical Objects

H	Height from ceiling to center of beam
D	Distance from fixture to wall
F.C.	Footcandles at center of beam
L	Length of effective lighted area
W	Width of effective lighted area
S	Spacing of multiple fixtures to effectively light wall
*	Length of lighted area is in excess of 30 feet

Data assumes a maximum tilt of 30 degrees.

For horizontal surface data refer to Lamp Application Data sheets.

CBCP - Center Beam Candlepower

Rev. 12/99